REDZ
SMART COMMUNICATION

redz-sc.com hi@redz-sc.com

BKV Series
USB to RS232 and RS485 Converters

With 5 V isolated power output

- USB to RS232 or USB to RS485 on one cable
- 5 V isolated power output for the connected device, up to 200 mA
- USB Type A or Type C cable, 3 m



The BKV RS232 and RS485 converters connect a field device with a serial line to a local device such as a PC over USB, and give it a 5 V isolated power output.

Main Functions

1. **USB to RS232:** converts USB to RS232 (BKV111, BKV121).
2. **USB to RS485:** converts USB to RS485 (BKV114, BKV124).
3. **5 V isolated power output:** supplies the connected device with up to 200 mA.
4. **Status LEDs:** PWR, Rx and Tx show power and data activity.
5. **USB cable, 3 m:** Type A or Type C cable, chosen by model.

Key Figures

5 V, up to 200 mA
isolated power output for the connected device

1500 V DC for 1 minute (DC-DC converter rating)
isolation of the 5 V power output

Up to 500 kbps
data rate of the RS485 transceiver (BKV114, BKV124)

Up to 256
transceivers on one RS485 bus (BKV114, BKV124)

-20 to +80 C
operating temperature

3 m
USB cable, Type A or Type C

What it does

- Connects a field device with an RS232 or RS485 line to the USB port of a PC.
- If needed, supplies that device from the built-in isolated 5 V power output.

What it shows

- PWR lights when the device is powered properly; Rx and Tx light during data transfer, following the data activity.

What it is for

- Reading energy meters through an optical probe on the meter.
- Working with RS232 or RS485 field devices from an application on the PC.

Technical Data

	BKV111 RS232, USB Type A cable	BKV121 RS232, USB Type C cable	BKV114 RS485, USB Type A cable	BKV124 RS485, USB Type C cable
Host interface	USB 2.0 full speed			
USB cable	USB Type A, 3 m cable	USB Type C, 3 m cable	USB Type A, 3 m cable	USB Type C, 3 m cable
Serial interface	RS232, terminal connector for 3 wire connection: Tx, Rx and GND		RS485, terminal connector for 2 wire connection and GND	
Data rate	250 kbps minimum transmission rate		Up to 500 kbps	
ESD (serial pins) *	HBM +/-15 kV; IEC 61000-4-2 air +/-15 kV, contact +/-8 kV		HBM +/-8 kV; IEC 61000-4-2 air +/-15 kV, contact +/-8 kV	
Isolated power output	5 V, up to 200 mA			
Output type	Unregulated; load regulation 10 % typical, 15 % maximum			
Isolation of the output	1500 V DC for 1 minute (DC-DC converter rating)			
Bus termination	-		No termination resistor on the board	
LEDs	PWR, Rx, Tx			
Operating temperature	-20 to +80 C			
Dimensions	Approx. 43 x 48 x 23 mm (without cable, antenna and terminal plug)			
Enclosure	ABS, black			

* ESD ratings are those of the transceiver chip; the board adds no separate protection parts.

On the RS485 models the signal ground is the USB ground; only the 5 V output is isolated.

Typical Application

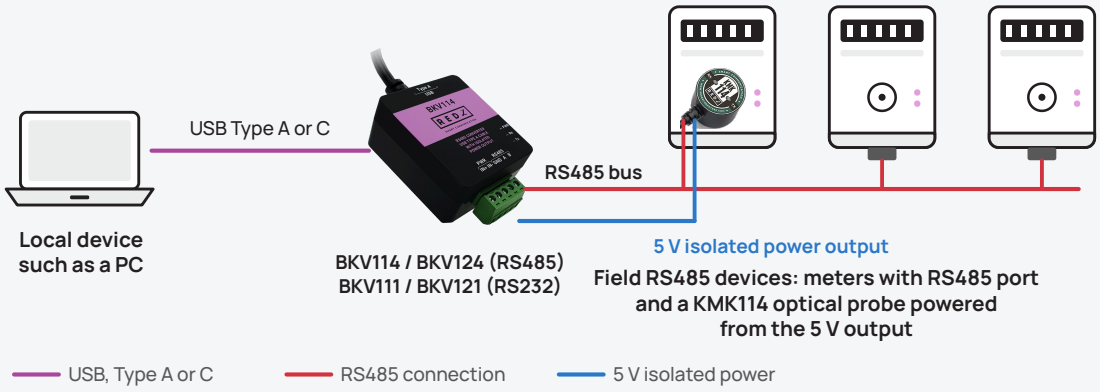

Typical application: a PC with a USB port connects field RS485 devices, such as meters with an RS485 port and KMK114 optical probes, and the 5 V isolated output supplies the probes.

Connect and Use

1. Connect the USB cable to the PC and complete the installation of the driver.
2. Connect the RS232 or RS485 side to the field device.
3. If needed, connect the 5 V isolated power output to the field device.
4. Use an application on the PC to interact with the field device.
5. Check the LEDs: PWR shows that the device is powered, Rx and Tx show data transfer.

Ordering Information

BKV111: USB to RS232 Converter With USB Type A Cable and 5V Isolated Power Output

BKV121: USB to RS232 Converter With USB Type C Cable and 5V Isolated Power Output

BKV114: USB to RS485 Converter With USB Type A Cable and 5V Isolated Power Output

BKV124: USB to RS485 Converter With USB Type C Cable and 5V Isolated Power Output